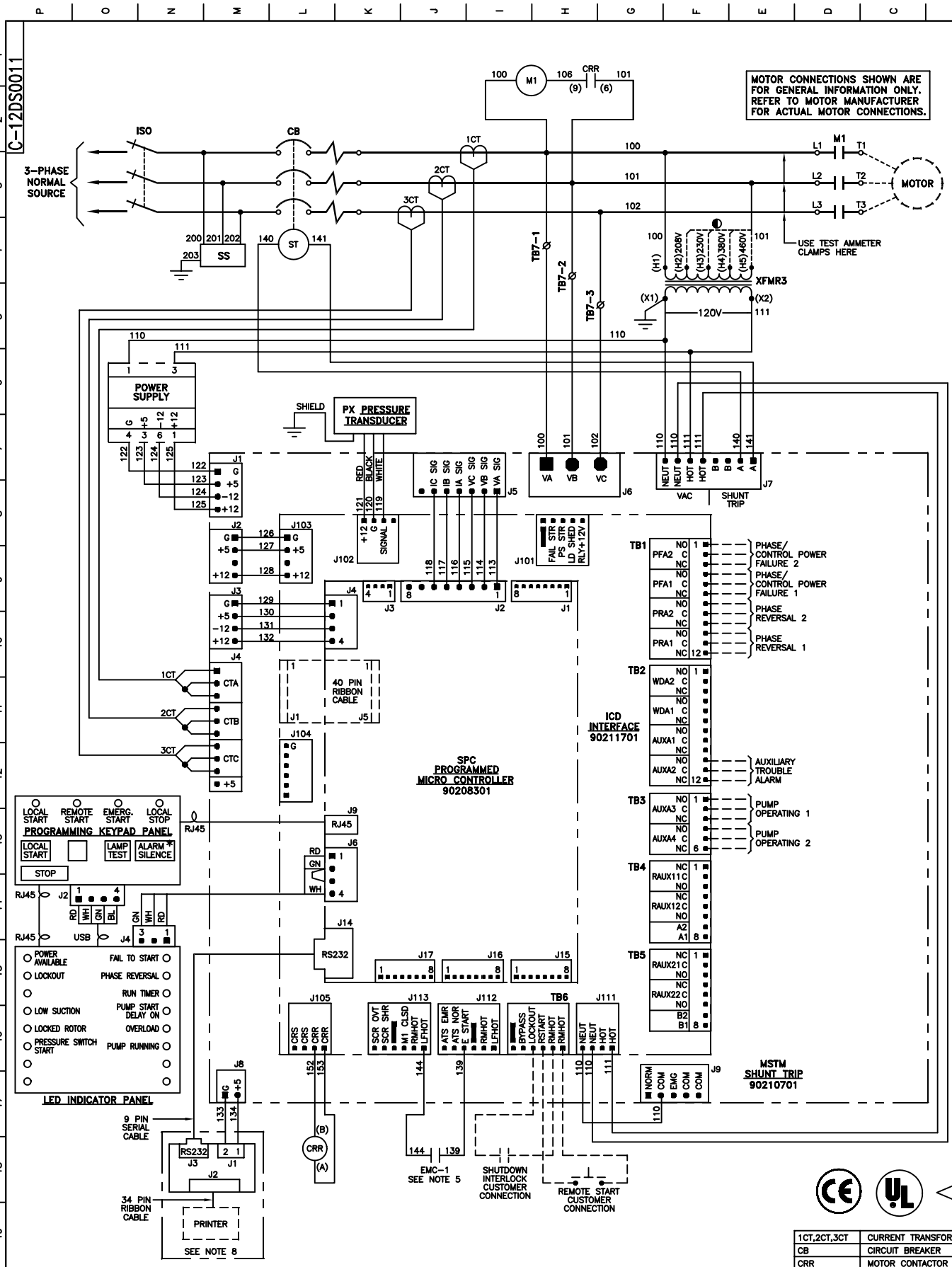

SYMBOL	DESCRIPTION
1CT,2CT,3CT	CURRENT TRANSFORMER
CB	CIRCUIT BREAKER
CRR	MOTOR CONTACTOR RELAY
EMC-1	EMERGENCY MANUAL CONTACT
ISO	ISOLATING DISCONNECT, NORMAL
M1	CONTACTOR
PX	PRESSURE TRANSDUCER
SS	SURGE SUPPRESSOR
ST	SHUNT TRIP
TB1-6	TERMINAL PLUG, BOARD MOUNTED
TB7	TERMINAL BLOCK
XFMR3	CONTROL TRANSFORMER

NOTES:

1. SCHEMATIC SHOWN IN A "NO POWER" STATE, NORMAL WATER PRESSURE APPLIED.
2. CUSTOMER CONNECTIONS ARE SHOWN BY MEANS OF DASHED LINES.
3. RELAY OUTPUT CONTACTS ARE RATED 8 AMPS AT 250 VAC.
4. MINIMUM OF 12" CLEARANCE MUST BE MAINTAINED BETWEEN PUMP ROOM FLOOR AND CURRENT CARRYING OR LIVE PARTS.
5. EMC-1 IS NORMALLY CLOSED, HELD OPEN WHEN OFF.
6. CONTROLLER SUITABLE FOR USE AS SERVICE EQUIPMENT.

*7. NOT USED UNLESS AUDIBLE ALARM IS SUPPLIED.

8. SHOWN FOR REFERENCE ONLY. USED WHEN SUPPLIED.

◐ – CONNECT PRIMARY TAP PER LINE VOLTAGE

REFERENCE DRAWING:

FOR FIRE PUMP CONTROLLER FIELD CONNECTIONS, SEE DWG. NO. 12DF0011.